Single Row/Double Row/Triple Row Straight Solder Tail

Pin Connectors 1.27mm : SGD

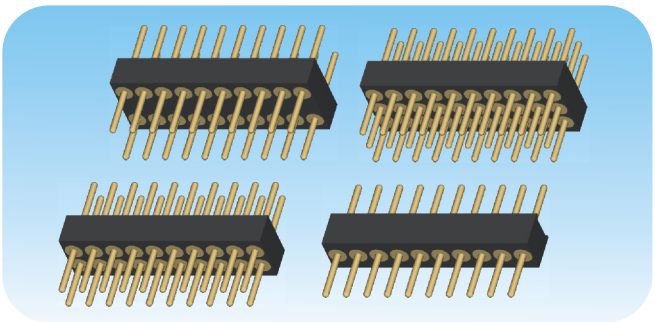

SPECIFICATIONS:

Insulator:	PPS
Fiammability:	UL 94V-0
Sleeve:	Brass
Mating pin ϕ:	0.41 mm
Mechanical life:	min 500 cycles
Rated cument:	1 A
Contact resistance:	max 10 mΩ
Dielectric strength:	min 1000V RMS

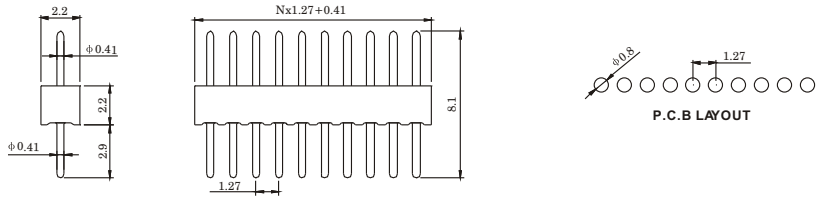

SGDXX0S1XX0810A

Straight pin connector:solder tail single row
Availability from:2 to 50 contacts
Standard number of contacts 25 and 50

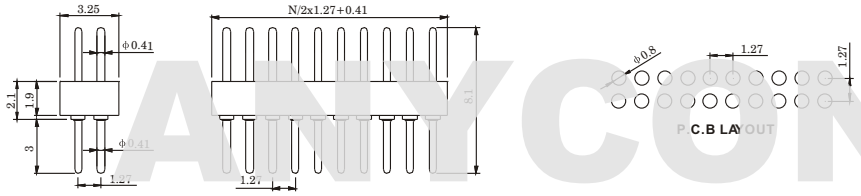

SGDXX112XX0810A

Straight pin connector:solder tail double row
Availability from:4 to 100 contacts
Standard number of contacts 50 and 100

ANYCONN

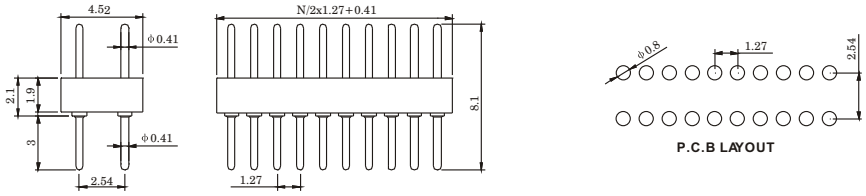

SGDXX212XX0810A

Straight pin connector:solder tail double row with 2.54mm row to row distance
Availability from:4 to 100 contacts
Standard number of contacts 100

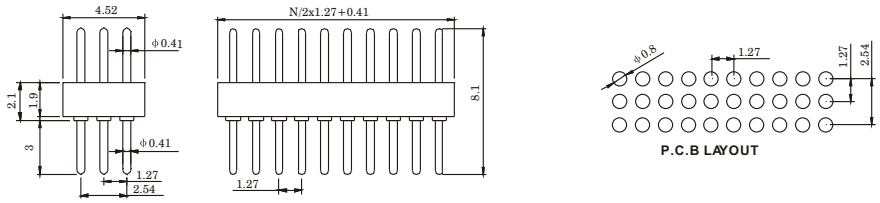

SGDXX11SXX0810A

Straight pin connector:solder tail triple row
Availability from:6 to 150 contacts
Standard number of contacts 150

XX	X	XX	X	X	X	X	X	XXXXX
Pitch(mm) SA 2.54 Male SB 2.54 Female SC 2.00 Male SD 2.00 Female SE 1.778 Male SF 1.778 Female SG 1.27 Male SH 1.27 Female	Angel Options D Straight R Right Angle S SMT	No. of Positions XX Positions	Dip spcing 0 No 1 1.27mm 2 2.54mm 3 7.62mm 4 10.16mm 6 15.24mm 9 22.86mm S Special	Insulator Height 0 No 1 1.90 mm 2 2.00 mm 3 2.80 mm 4 3.00 mm 5 4.20 mm 6 7.00 mm S Special	Insulator Type 0 No 1 Single Row 2 Double Row 3 Open frme 4 W/O Bar S Special	Pin Plated 0 No 1 Tin150μ" 2 Tin200μ" 3 G/F 4 Gold3μ" 5 Gold10μ" 6 Gold15μ" S Special	Clip Plated 0 No 1 Tin150μ" 2 Tin200μ" 3 G/F 4 Gold3μ" 5 Gold10μ" 6 Gold15μ" S Special	Pin length Options 0810A 8.10mm S Special